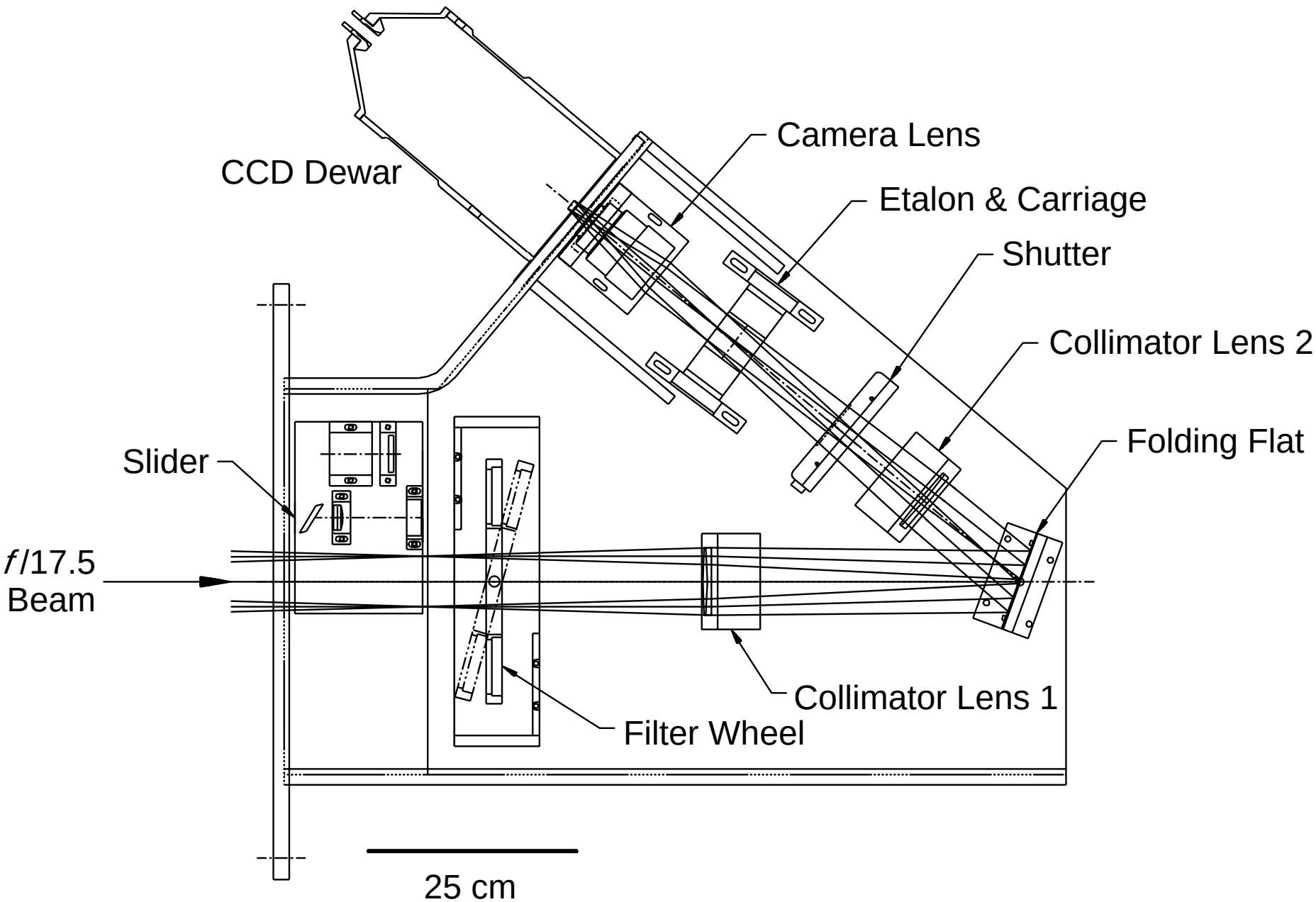
CCD Dewar
Camera Lens
Etalon & Carriage
Shutter
Collimator Lens 2
Folding Flat
Slider
f/17.5
Beam
Collimator Lens 1
Filter Wheel
25 cm